BE-SB
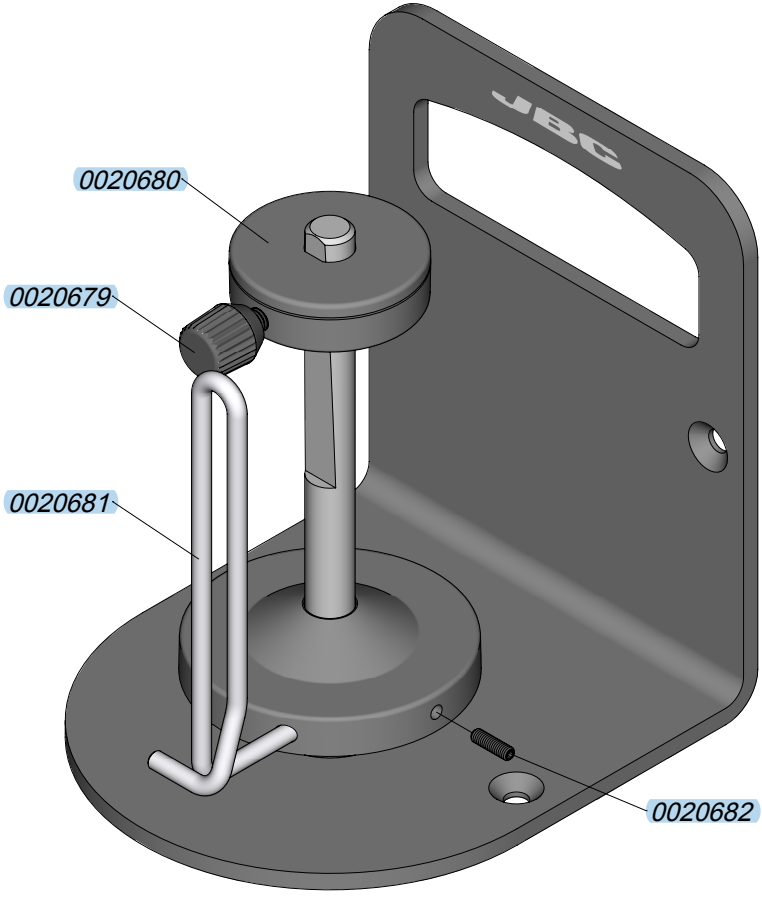
SOLDER REEL STAND