JNASE
High-Precision Hot Air Station
Ref.: **JNASE-9A** 100V
JNASE-1A 120V
JNASE-2A 230V

SPARE PARTS	
CONTROL UNIT:	
-CIRCUIT	0025820
-ENCLOSURE	
· TOP	0022347
· BOTTOM	0026511
· FRONT+DISPLAY	0026488
· BACK	0022349
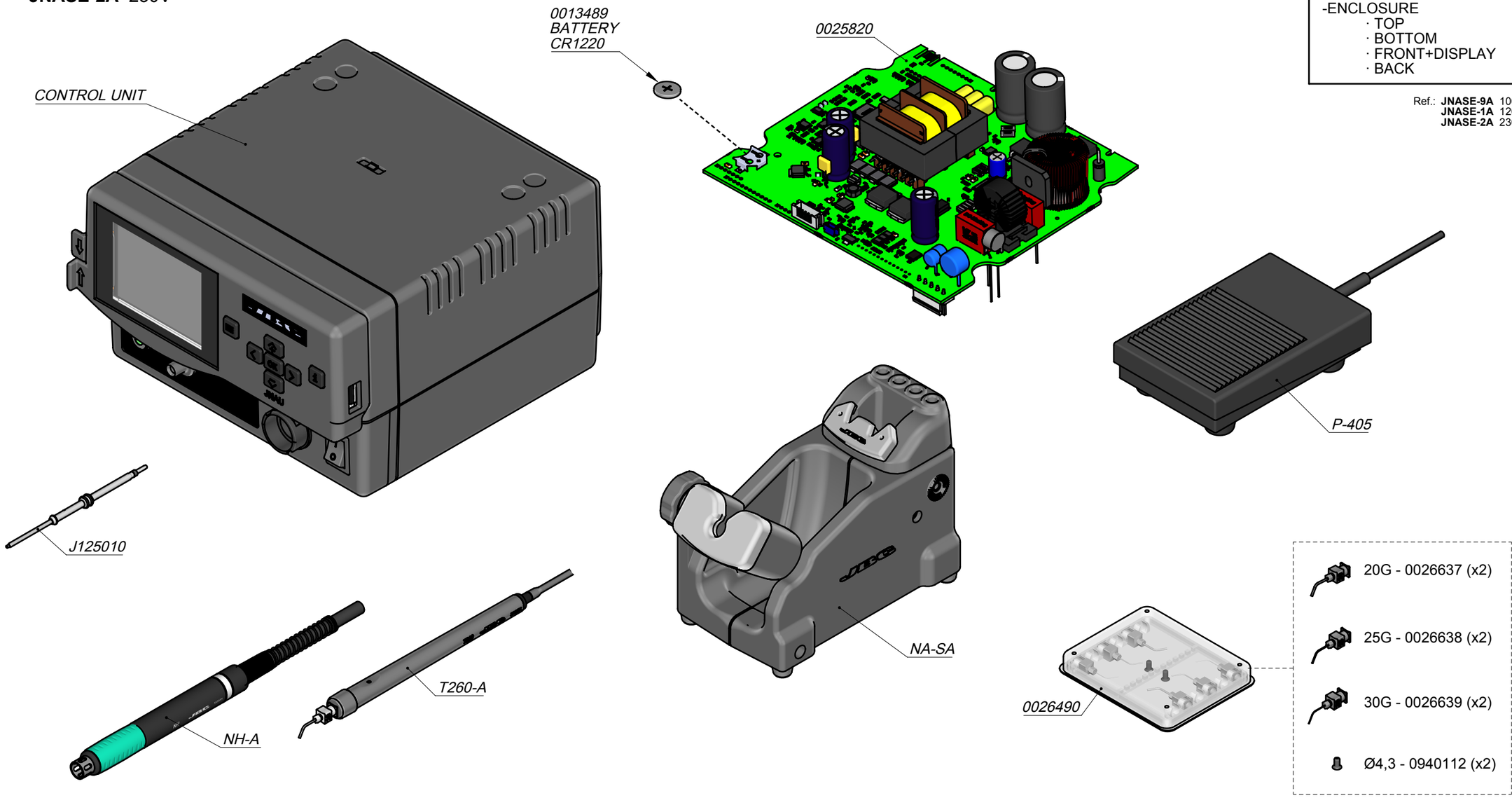
Ref.: **JNASE-9A** 100V FUSE T-2A
JNASE-1A 120V FUSE T-2A
JNASE-2A 230V FUSE T-2A