Ref: ***0019726***
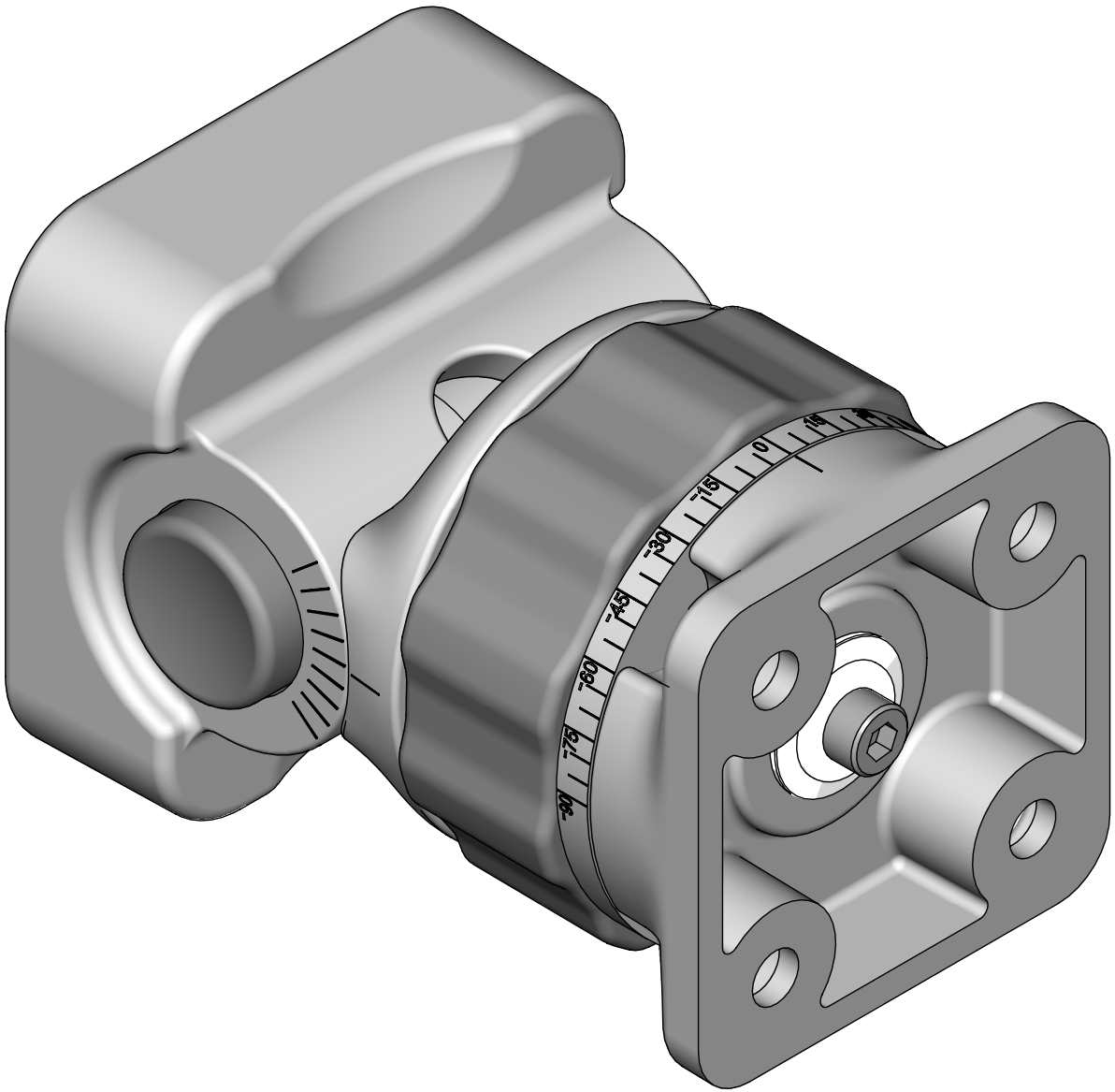
Ball joint for RWA-A